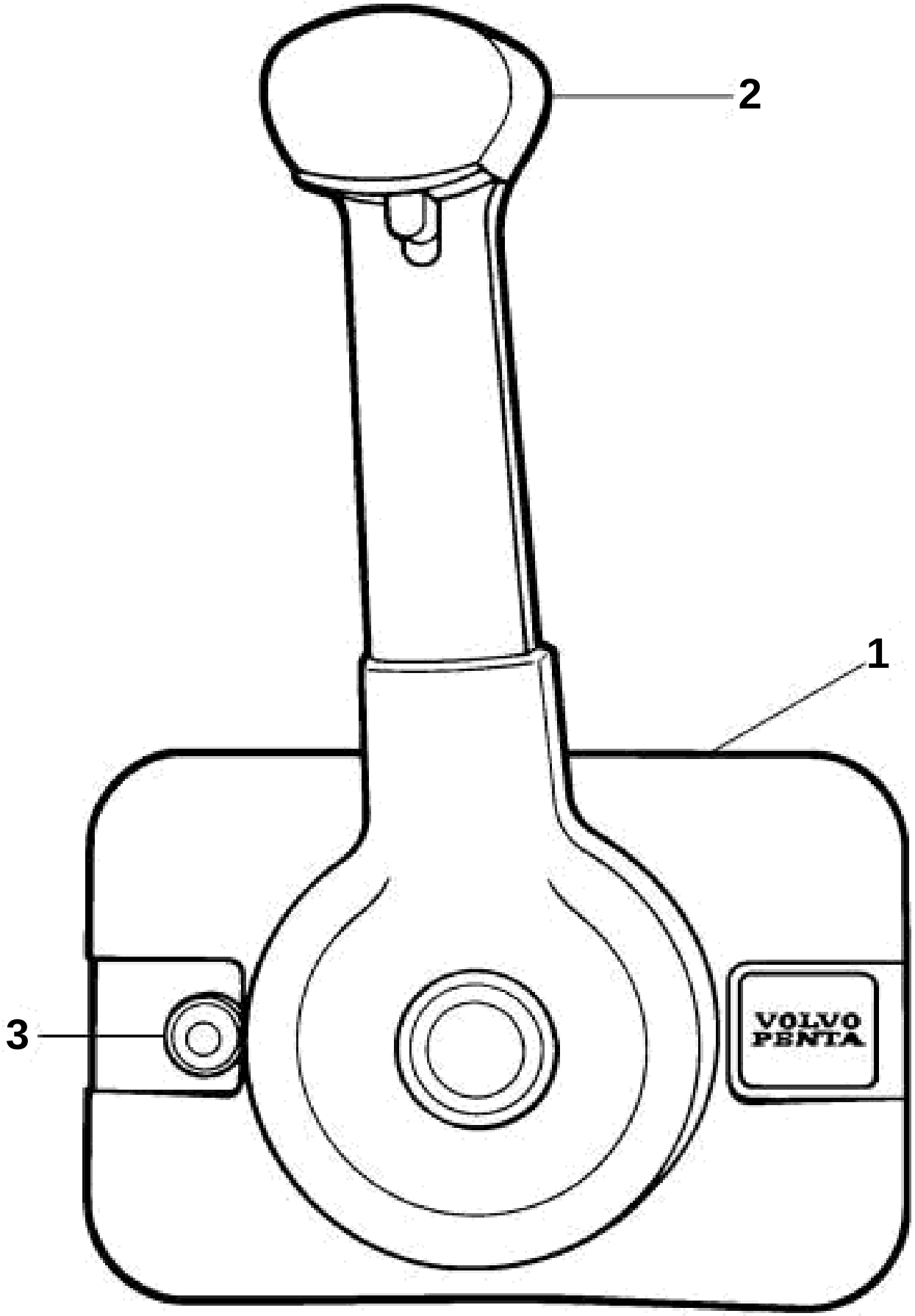
2
1
3
VOLVO
PENTA

REMOTE CONTROL ASSEMBLY 4

REF	PART NO.	QTY	DESCRIPTION	NOTES
	3855624	1	Throttle control, Side mount with trim & titt	
1	3856845	1	· Cover	
2	3856846	1	· Lever	
3	3856840	1	· Switch	Not shown
	3856839	1	· Switch	Not shown
	3856848	1	· Switch	
	3856849	1	· Rubber cap	Not shown
	3856847	1	· Kit	Not shown